**UNITED TRANSFORMER CORPORATION**

150 VARICK STREET, NEW YORK 13, N.Y.

# RECOMMENDED VACUUM TUBE AMPLIFIER CIRCUIT PROVIDING 50 WATTS

± 1 db 40 cycles to 10 KC . . .

At 1 watt, ± 1 db 20 cycles to 20 KC.

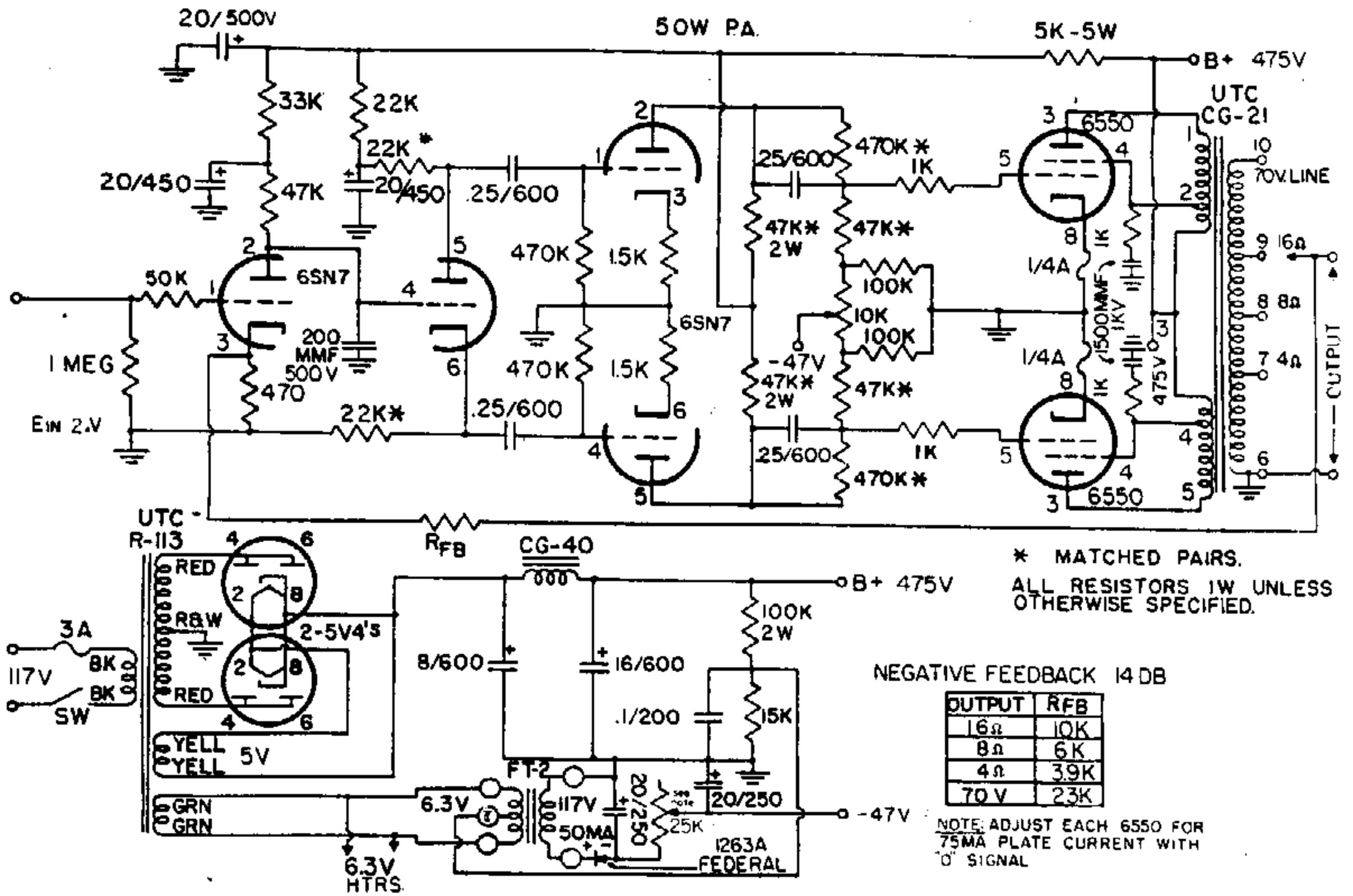


* MATCHED PAIRS.

ALL RESISTORS 1W UNLESS OTHERWISE SPECIFIED.

NEGATIVE FEEDBACK 14 DB

| OUTPUT | RFB |
|---|---|
| 16Ω | 10K |
| 8Ω | 6K |
| 4Ω | 3.9K |
| 70 V | 23K |

NOTE: ADJUST EACH 6550 FOR 75MA PLATE CURRENT WITH "0" SIGNAL